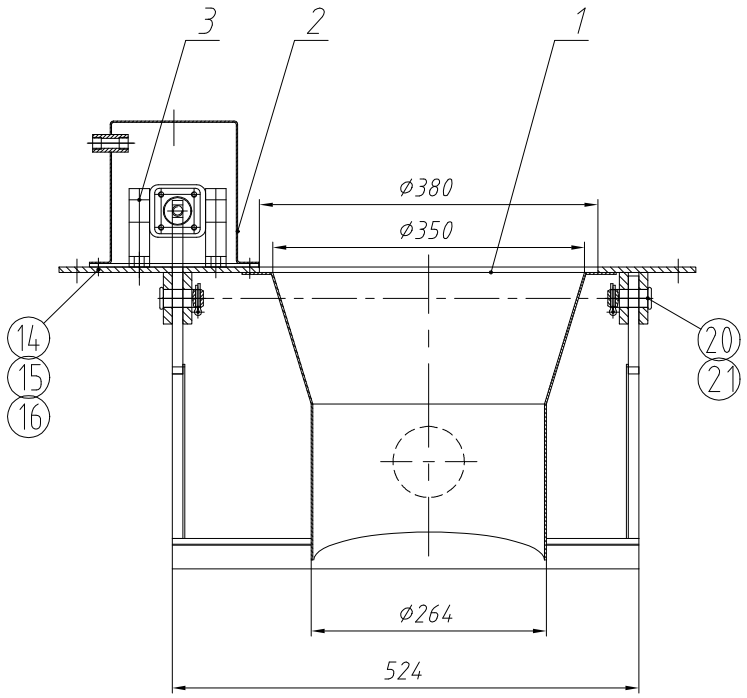

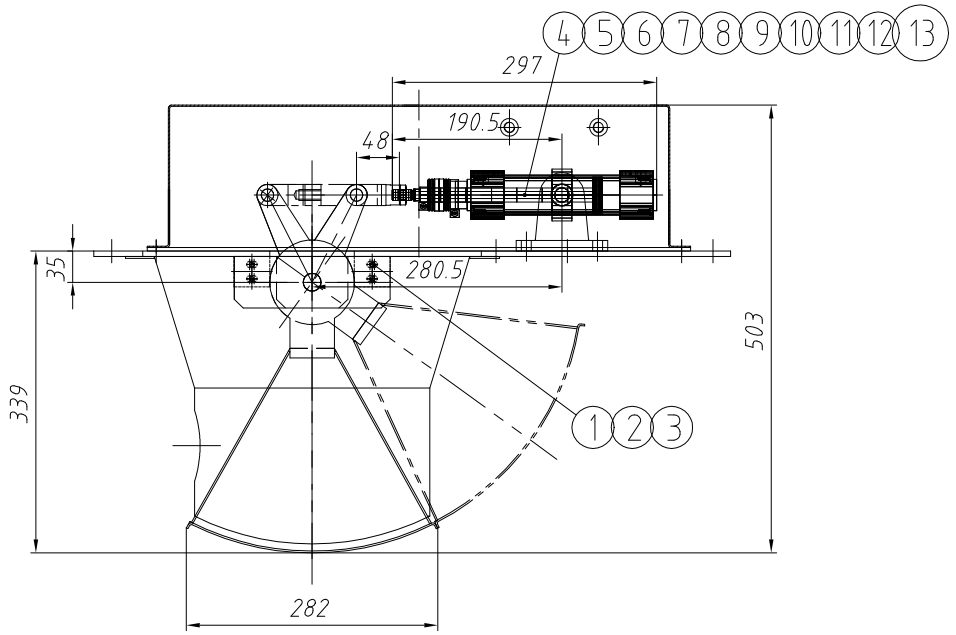

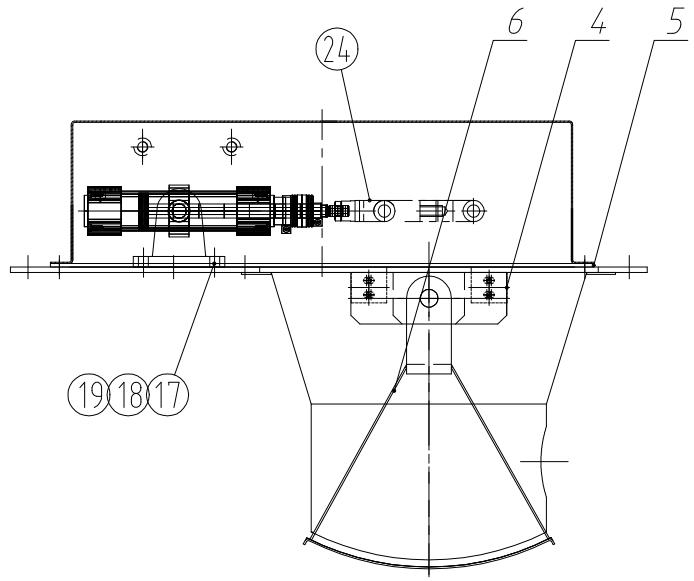

Cylinder connection mode

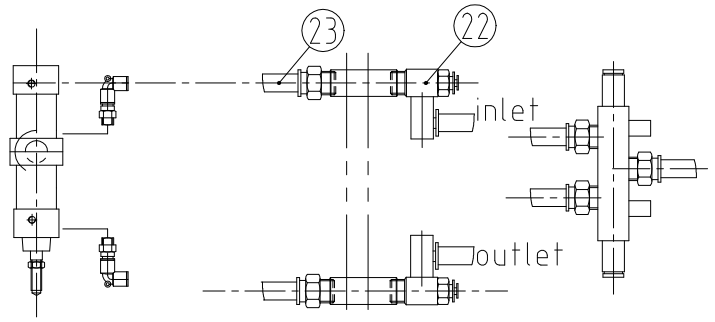

technical requirement

1、After the equipment is manufactured, kerosene leakage test shall be conducted on the weld, and no leakage shall be deemed as qualified.

2. After assembly, the door of block 6 should rotate flexibly and guide reliably, and the seal at the rotating position should be pressed tightly. Make sure the seal is tight.。

The electromagnetic valve is installed on the gas path installation plate of the unpacking room.

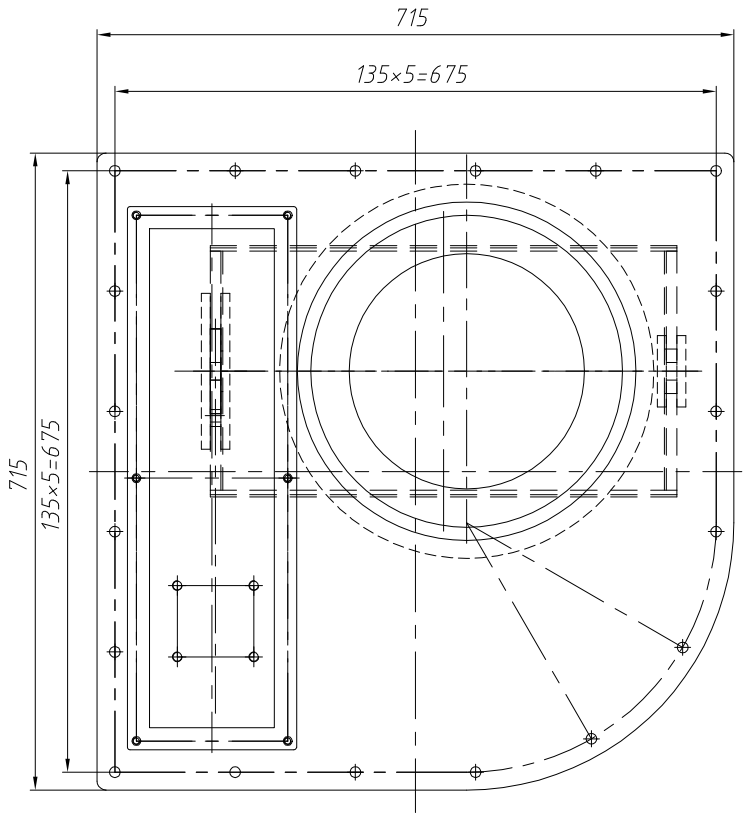

No.	Code	Part Name	Qty	Material	Weight: Single Weight	Weight: Total Weight	Remark
12	030530300058	L-shaped threaded two-way quick plug joint PL1002	2				Supplied by Mesnac
11	030530300256	Threaded straight-through joint PC1002	5				Supplied by Mesnac
10	030530900010	Muffler AN110-01	2				Supplied by Mesnac
9	030530600973	Two-position five-way solenoid valve SY7120-5D-02-F2-A	1				Supplied by Mesnac
8	030911100002	Tightening piece M18	2				Supplied by Mesnac
7	030920401927	M8 single-ended precast 3-hole 5m elbow PVC TUBE 4MM-2MM	2				Supplied by Mesnac
6	030900900727	Magnetic switch BMF 235K-PS-C-2A-SA2-S49-M03	2				Supplied by Mesnac
5	030902700001	Magnetic switch installation attachment BMF 235-HM-M9	2				Supplied by Mesnac
4	030530104178	Standard cylinder C96SDT40-100CJ	1				Supplied by Mesnac
3	030250100011 GB/T93-1987	Washer 6	4	65Mn zinc plating passivation	0	0	
2	030250500018 GB/T95-2002	Washer 6	4	100HV zinc plating passivation			
1	030240100204 GB/T65-2000	Screw M6×35	4	4.8 Galvanizing passivation			
6	020102080000026 XJqhqb.02.03.03	Blocking door	1	weld assembly	5.31	5.31	
5	030050116038 XJqhqb.02.03-02	1704 Rubber Pad	1	1704 soft rubber plate	0	0	
4	030050116039 XJqhqb.02.03-01	Gasket	1	Polyurethane rubber	0	0	
3	020102LS0000159 TXJ0211AC.06.02	Cylinder block	2	weld assembly	0.8	1.6	
2	020102080000027 XJqhqb.02.03.02	Cylinder cover	1	weld assembly	4.11	4.11	
1	020113090000181 XJqslh.13A.01.01	Blocking device bracket	1	weld assembly	24.8	24.8	

No.	Code	Part Name	Qty	Material	Weight		Remark
24	030530304609	Y connector F-M12×125Y	1				Supplied by Mesnac
23	030600200008	PU tube US98A100065100MBU	4				Supplied by Mesnac
22	030421100096	One-way throttle PSL1002A	2				Supplied by Mesnac
21	030270100133 GB/T91-2000	Pin 5×25	2	Q235A Zinc Plating Passivation			
20	030271301122 GB/T882-1986	Pin B20×45	2	45 oxidation			
19	030250100015 GB/T93-1987	Washer 10	4	65Mn zinc plating passivation			
18	030250500024 GB/T95-2002	Washer 10	4	100HV zinc plating passivation			
17	030240500581 GB/T70.1-2000	Screw M10×30	4	8.8 Galvanizing passivation			
16	030250100013 GB/T93-1987	Washer 8	6	65Mn zinc plating passivation			
15	030250500021 GB/T95-2002	Washer 8	6	100HV zinc plating passivation			
14	030240500490 GB/T70.1-2000	Screw M8×20	6	8.8 Galvanizing passivation			
13	030270100081 GB/T91-2000	Pin 3.2×20	1	1Cr18Ni9			

Mark	Number	Modified file No.	Signature	Date
Designer		Standarder		
Checker		Approver		20210628
Verifier		Security Classification		20450506 止
Processer		View		

Assembly

Mark	Weight	Scale
A	35.82	1:6

Total No. No.

MESNAC CO., LTD

Blocking device

020113010000389
XJylba.13B.06